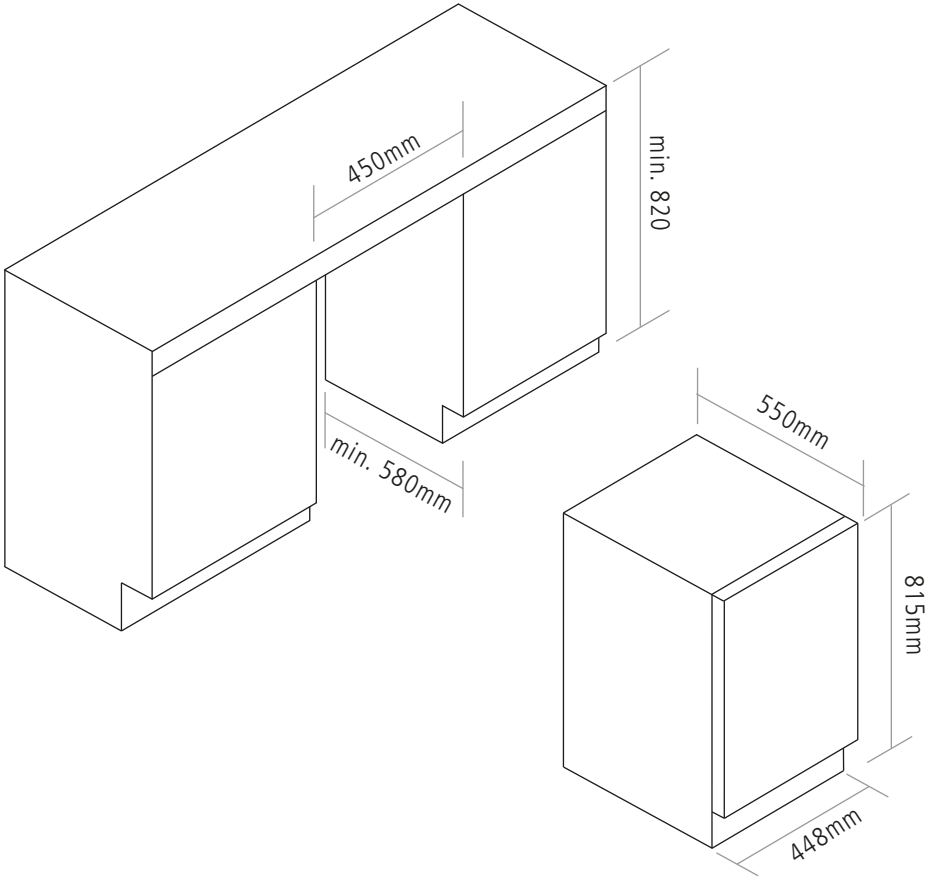# DIMENSIONS