BRISTAN

Installation Instructions and User Guide

Infrared Automatic Soap Dispensor

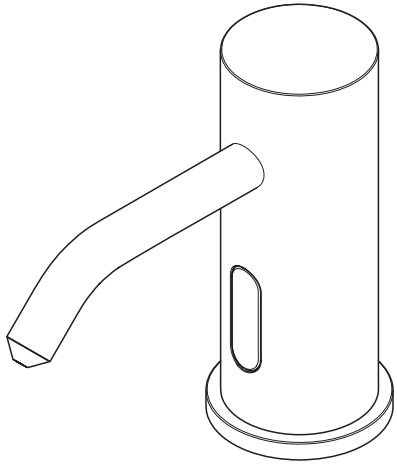

Models covered: IRSD1-CP, IRSD1-BN, IRSD1-BZ

Please keep this booklet for future reference.

Installer, when you have read these instructions please ensure you leave them with the user.

Contents

Thank you for choosing Bristan, the UK's leading showers and taps expert.

Your Bristan Soap Dispenser has a non-touch control which uses infrared sensing technology to detect human presence. Once detected, the spout instantly dispenses a small amount of liquid soap into the users hands to eliminate unnecessary wastage, whilst creating a more hygienic washroom solution.

All products manufactured and supplied by Bristan are safe and comply to legislative requirements. Providing they are installed correctly and receive regular maintenance in accordance with these instructions your user experience will not be affected.

For a safe and successful installation these instructions should be used as guidance, thereafter they should be left with the user.

Important Safety Information 3

Specifications 3

Product Features 4

Installation Requirements 5

Installation 6-8

Commissioning 9

Operation 10

Maintenance 11

Troubleshooting 12-13

Guarantee 14-15

Need help? Give us a call on 0844 701 6273 and speak to one of our trained advisers.

Important Safety Information

- Please read these instructions thoroughly and retain for future use.
- All products manufactured and supplied by Bristan are safe provided they are installed, used correctly and receive regular maintenance in accordance with these instructions.
- **If you are in any doubt about your ability to install this product safely you must employ the services of an experienced qualified plumber.**
- ⚠ **Warning:** Do not operate the product if you suspect it is frozen. Do not site it where it might be subjected to freezing conditions.
- Remove all packaging and check the contents for damage before starting installation.
- Before starting any installation please consider the following: before drilling into walls, check that there are no hidden electrical wires, cables or water supply pipes. This can be checked with the aid of an electronic detector.
- If power tools are used do not forget to: - Wear eye protection
  - Unplug equipment after use
- This product **must** not be modified in any way as this will invalidate the guarantee.

Specifications

Sensing Range: 0-8 cm

Activation Time: 0.5-1s

Power Supply: AC: 230V

DC: 1.5V (4 x AA alkaline batteries - Not Supplied)

Bottle Capacity: 1.6 litres

Ambient Temperature: Normal Temperature

Viscosity of liquid soap: 100-3500cp (mpA · s)

Recommended Usage			
Domestic	✔	Heavy Commercial	✔
Light Commercial	✔	Health Care	✘

CE

Product features

More Hygienic

The proximity sensor removes the need to touch the spout, reducing the spread of germs and reducing the chance of cross infection.

Battery Override

Your infrared soap dispenser is supplied with a back up battery pack.

In the event of a power failure, the product will automatically switch to battery operated mode to ensure the spout continues to function.

Low Battery Warning

When the batteries run low and the power falls below 3.9V the sensor light will flicker to indicate the batteries are running low and need replacing.

When the batteries are exhausted the sensor light will not light up.

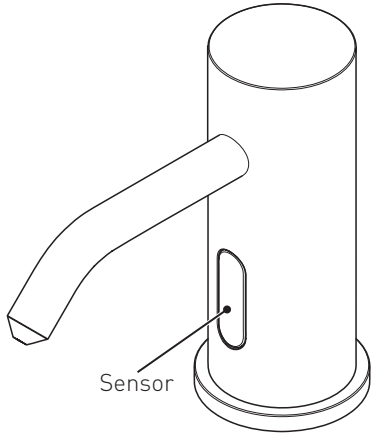

Installation Requirements

Electrical Connections

Regulations: The electrical installation must be carried out in accordance with the national electrical regulations and installed by a qualified person.

Safety: In the interests of electrical safety a 30 mA residual current device (R.C.D not supplied) should be installed in the supply circuit. This may be part of a consumer unit or a separate unit.

Before starting work on the electrical supply ensure the power supply is isolated.

DO NOT allow the supply cord to contact hot surfaces. The cord should be safely routed and secured by cable clips.

Connections: The power supply must be permanently connected to the fixed wiring of the mains supply using the factory fitted supply cord, via a switched fused spur off the ring main.

The wires in the mains lead are coloured in accordance with the following code:

Blue: Neutral

Brown: Live

As the colours of the wires in the mains lead of this appliance may not correspond with the coloured markings identifying the terminals in your connection unit proceed as follows;-

The wire which is coloured blue must be connected to the terminal which is marked with the letter 'N' or is coloured black.

The wire which is coloured brown must be connected to the terminal which is marked with the letter 'L' or is coloured red.

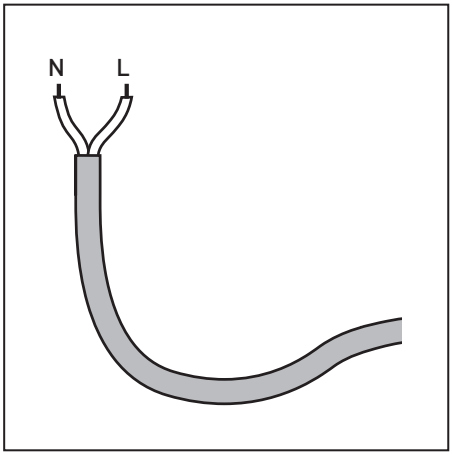

Fuse: This following fuse size should be used.

Model	Fuse Size (AMPS)
IRSD1-CP	3
IRSD1-BN	3
IRSD1-BZ	3

Supply Cord Replacement

If the supply cord is damaged, it must be replaced by a genuine Bristan supply cord. Contact Bristan Customer Services on 0844 701 6273 to request new spare parts.

Installation

1. Fit The Spout

Fit the spout to the sink / basin ensuring the dispensing cable and sensor cable are threaded through the hole in the sink / basin.

2. Secure Spout to Sink / Basin

Screw the metal backnut onto the thread of the spout upto the underside of the sink / basin.

Tighten backnut using a suitable spanner.

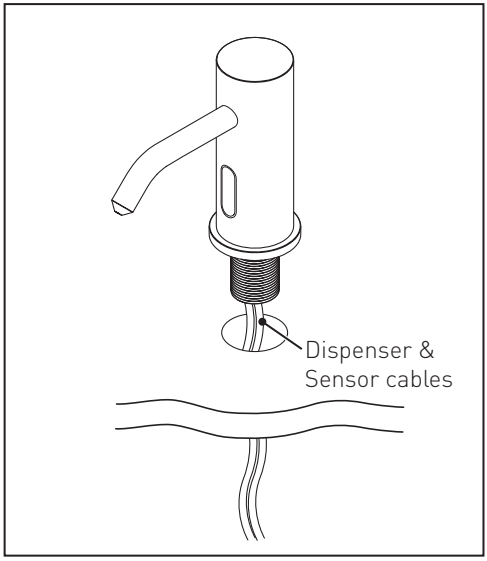

2. Fit Wall Brackets

Position the brackets onto the wall surface and mark the position of the fixing holes.

Remove the brackets and drill suitable holes for the wall plugs supplied.

⚠ Before drilling into walls, check that there are no hidden electrical wires, cables or water supply pipes. This can be checked with the aid of an electrical detector:

If power tools are used do not forget to:

- Wear eye protection
- Unplug equipment after use

Fit the wall plugs and position the brackets into position and secure using the screws provided.

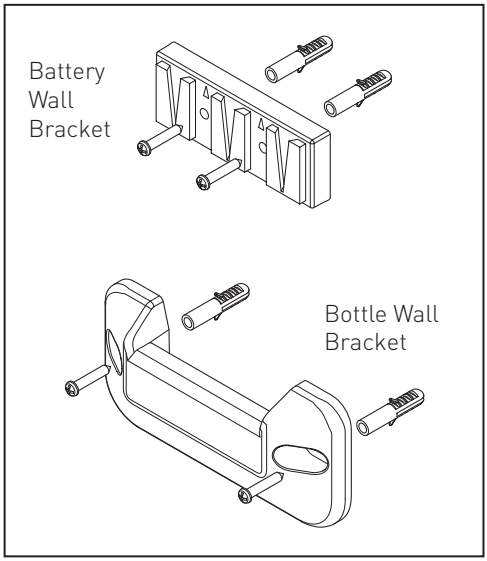

Need help? Give us a call on 0844 701 6273 and speak to one of our trained advisers.

Installation - cont.

4. Attach Pump to Bottle

Ensure the dispenser tube is located inside the bottle and push the pump down firmly onto the bottle until a loud 'click' is heard.

To remove the pump from the bottle press the release button in on the side of the pump and pull the pump from the bottle.

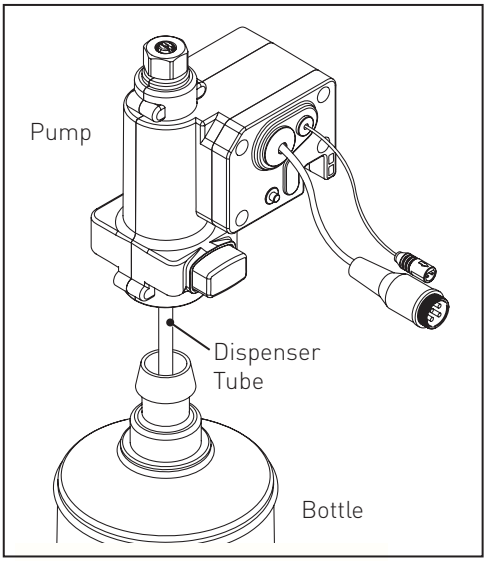

5. Connect Sensor Cable and Dispenser Cable

Connect the sensor cable from the spout to the sensor cable on the pump. Push the two connections together and tighten the connecting ring to ensure the two connections are locked together.

Connect the dispening cable from the spout into the top connection on the pump.

Push the threaded connection of the dispensing cable into the connection on the pump and tighten the nut ensuring it is fully tightened.

A suitable spanner may be used to tighten the nut.

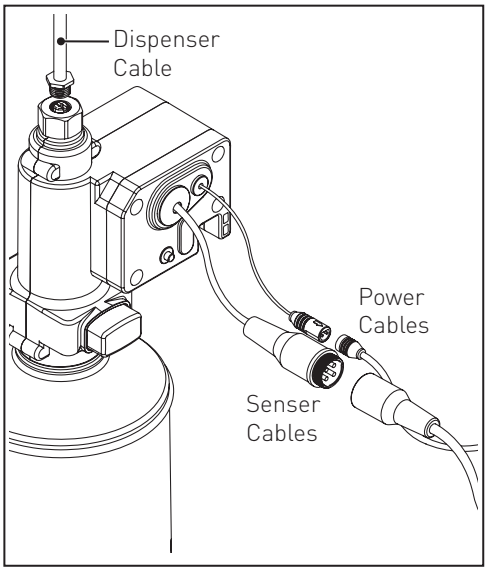

6. Place Pump into Bracket

The pump has a cut out section which the wall bracket slots into.

Installation - cont.

7. Connect Power Supply Cable
Before starting any electrical work ensure the power supply is isolated.

Wire the electrical power cable into a switched fused spur off the ring main.

The blue wire should be wired to the neutral connection and the brown wire should be connected to the live connection.

Note: For full electrical requirements see 'Electrical Connections' in 'Installation Requirements' section on page 5.

⚠ **Important:** The power lead must be permanently connected to the fixed wiring of the mains supply using the factory supplied power cable.

Plug the power cable into the power cable on the pump.

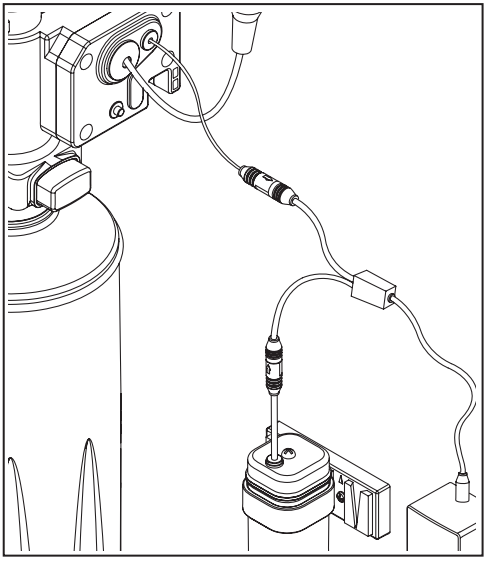

8. Inserting Batteries

Remove the battery cover by loosening the screw in the top of the cover.

Insert 4 x AA batteries into the battery box ensuring they are inserted the correct way.

Note: Only use 1.5V AA (LR6) Alkaline batteries (preferably => 2000mAh for good battery life).

Replace the battery box cover and tighten the screw. Insert the battery box into the holder.

Push the holder into the battery box wall bracket.

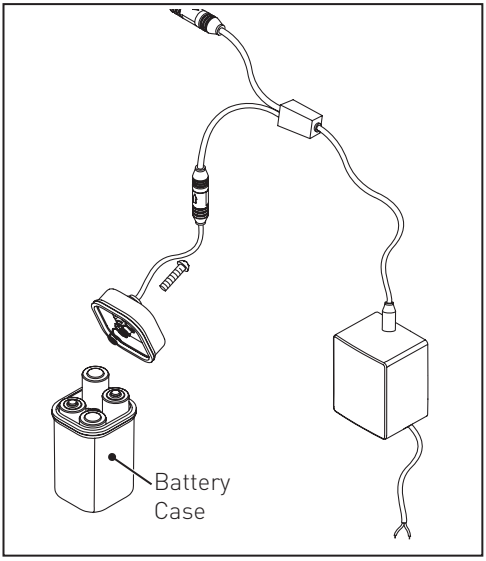

Commissioning

Commissioning Sequence

Before using the soap dispenser for the first time the following sequence must be carried out.

Fill the bottle full of liquid soap. Refer to specification section on page 3 for the correct liquid soap to be used.

Locate the dispense button on the side of the pump. Press and hold the button until soap is dispensed from the spout. This will ensure the dispenser tube and cable are full of liquid soap.

Selecting Volume Adjustment

The soap dispenser has four dispense volume adjustment settings. Each adjustment setting dispenses a different volume of liquid soap.

Volume Adjustment Setting	Volume of liquid soap (ml)
Low	0.5
Normal	1
Medium	1.5
High	2

To adjust the volume of soap dispensed follow the steps below.

Locate the volume adjustment switches under the rubber cover.

Set the switches to the required position for the desired volume adjustment setting.

Refer to the switch position diagrams.

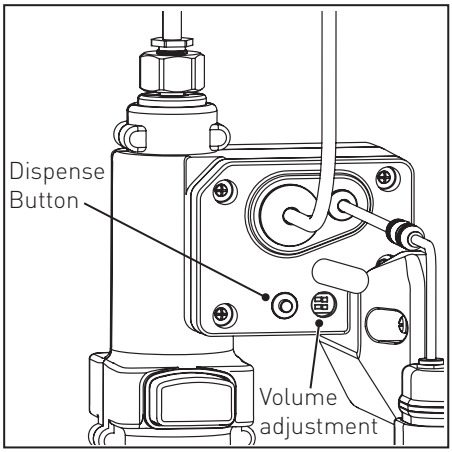

Volume Adjustment Switch Positions

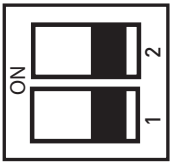

Low: 0.5 ml

Switch 1: Off
Switch 2: Off

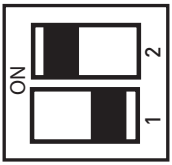

Normal: 1 ml

Switch 1: Off
Switch 2: On

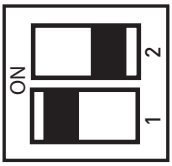

Midium: 1.5 ml

Switch 1: On
Switch 2: Off

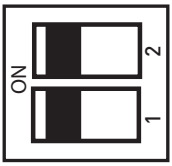

High: 2 ml

Switch 1: On
Switch 2: On

Operation

Using the Automatic Soap Dispenser

Place the users hands under the spout within the sensing range.

Once the users hands have been detected a small amout of liquid soap will be dispensed from the spout into the users hands.

Note: The sensing range 0-8cm from the sensor.

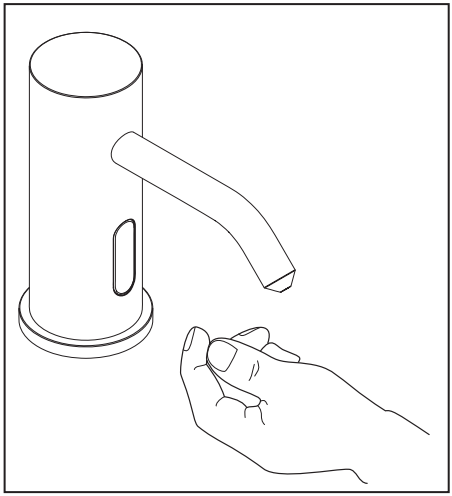

Maintenance

General Cleaning

Your fitting has a high quality finish and should be treated with care to preserve the visible surfaces. All surfaces will wear if not cleaned correctly, the only safe way to clean your mixer is to wipe with a soft damp cloth. Stains can be removed using washing up liquid. All bath cleaning powders and liquids will damage the surface of your fitting, even the non-scratch cleaners.

Note: Never use abrasive detergents or disinfectants or those containing alcohol, hydrochloric acid or phosphoric acid.

Disposal and Recycling

End of Product Life

When this appliance has reached the end of its serviceable life, it should be disposed of in a safe manner, in accordance with current local authority recycling, or waste disposal policy.

Battery Disposal

Spent batteries should not be disposed of with normal household waste. Contact your local authority for information on waste disposal and recycling.

This symbol on the product or packaging indicates that this product should not be disposed of with your other household waste. Instead, it is your responsibility to dispose of your waste equipment by handing it over to a designated collection point for the recycling of waste electrical and electronic equipment. The separate collection and recycling of your waste equipment at the time of disposal will help to conserve natural resources and ensure that it is recycled in a manner that protects human health and the environment.

For more information about where you can drop off your waste equipment for recycling, please contact your local council office, your household waste disposal service or the shop where you purchased the product.

Troubleshooting

Symptom	Cause	Remedy
Spout does not dispense soap.	Senor cable not connected.	Check that the sensor cable is connected. If not connected, connect sensor cable. Refer to 'Installation' section on pages 6-8.
	Possible blockage in dispense tube or dispense cable.	Remove pump from bottle and clean tube. Remove dispense cable from pump and clean.
	Low or no soap in bottle.	Fill bottle with liquid soap. When soap is at approximately 20mm from the bottom top soap up.
	No electrical power to pump.	Ensure power cable is connected. Refer to 'Installation' section on pages 6-8.
No power to the spout.	Mains power cable not connected.	Connect mains power supply cable. Refer to 'Installation' section on pages 6-8.
	Mains power supply failed and no batteries fitted or batteries low.	Check mains power supply. Insert / change batteries. Refer to 'Installation' section on pages 6-8.
Spout dispenses soap randomly without a user present.	Object in sensing range.	Ensure the sensing range is clear.

Troubleshooting - cont.

Symptom	Cause	Remedy
Sensor light not working.	Sensor light faulty.	Contact Bristan Customer Services on 0844 701 6273.
	Batteries are exhausted.	Replace batteries.
Short cycles of batteries.	Incorrect batteries fitted.	Replace batteries. Ensure batteries are 1.5V AA (LR6) Alkaline batteries (preferably =>2000mAh) for good battery life.
Infrared sensor flickering.	Batteries running low.	Replace batteries. Ensure batteries are 1.5V AA (LR6) Alkaline batteries (preferably =>2000mAh) for good battery life.

Guarantee

At Bristan, we want to make things as easy as possible for our customers. That's why we design products that are easy to fit and use, and that are quality tested to make sure they won't let you down. It's also why we offer solid guarantees on all products, effective from the date of purchase, to give you peace of mind.

All Bristan Commercial products are covered by a 1 year guarantee. This also includes 1 year labour cover which means that, in the unlikely event that there is a problem in the first year after purchase, we'll send one of our expert engineers to fix it.

*Labour is provided by an approved Bristan Care engineer or appointed representative. The guarantee only applies to products with a manufacturing fault. There will be a call out charge for any incidents where no fault has been found with the product, or if the issue is due to poor installation or maintenance.

Guarantee Terms and Conditions
This guarantee is in addition to your statutory and other legal rights and is subject to the following conditions:

• The product was purchased within the United Kingdom or Republic of Ireland.

• The guarantee applies solely to the original purchaser with proof of purchase.

• The installation must allow ready access to all products for the purpose of inspection, maintenance or replacement.

• Repair under this guarantee does not extend the original expiry date. The guarantee on any replacement parts or product ends at the original expiry date

• Any part found to be defective during the guarantee period will be replaced without charge, providing that the product has been installed in accordance with the instructions given in this guide and used as the manufacturer intended.

The guarantee does not cover

• Damage or defects caused by:

- General wear and tear (including special non-chrome finishes;

- Components such as filters, seals, 'O' rings and washers)

- Incorrect installation

- Repair using non-Bristan part

- Accidental or wilful misuse

- Corrosion and the use of inappropriate cleaning products.

- System debris including the build up of limescale (which can be controlled through regular servicing and maintenance)

• Compensation for loss of use of the product or consequential loss of any kind.

In the interests of continuous product improvement, Bristan reserves the right to alter product specifications without notice.

The Bristan Product Guarantee does not affect your statutory rights as a consumer.

Guarantee & Service Policy

Need help?
If this product does not function correctly when first used, contact Bristan Care Customer Service on 0844 701 6273 where our expert team of advisors will be able to offer you help and advice.

Problems during the guarantee period
In the unlikely event that you encounter any problems with the product during the guarantee period, contact Bristan Care Customer Service on 0844 701 6273 with your proof of purchase and we will work to resolve the problem quickly.

Bristan Care Customer Support
Bristan customers also benefit from the support of Bristan Care, our comprehensive customer support package which offers:

Technical support hotline
(Tel: 0844 701 6273) with access to fully trained advisors who can offer installation advice, talk you through quick maintenance checks, or recommend the best course of action to fix any problems with a product

Expert advice
Find easy to follow 'how to' video guides and technical FAQs online at www.bristan.com. Our guides take you step-by-step through many product installations and you can find plenty of easy guides to quick product fixes and servicing.

Spare parts
We hold thousands of spares and we keep them for discontinued products for over seven years. Spares can easily be ordered online at www.bristan.com and are dispatched the same day.

Expert plumbing engineers
If we can't solve the problem over the 'phone or with a spare part, then we'll send out one of our Bristan Care engineers to take a look. Bristan Care engineers provide free support for products that are within guarantee, but are also available to service products that are out of guarantee for a small charge. For details, please call customer services on 0844 701 6273.

Part Number: FI Infrared Soap
Issue: D2

BRISTAN

Bristan Group Ltd.
Birch Coppice Business Park
Dordon
Tamworth
Staffordshire
B78 1SG
Web: www.bristan.com
Email: enquire@bristan.com

A Masco Company

Useful contact details:

Customer Service:
0844 7016273

Customer Service Email:
Customercare@bristan.com

Customer Service Fax:
0844 7016275

Reception:
0844 7016274

Join us on...