MIMAS MINI INSTANT HOT DISPENSER

- **Open vented system**
- **Digital temperature control accurate to 0.5°C**
- **Multiple pre-set temperatures ranging from 75°C to 98°C**
- **High quality nano filtration technology with limescale reduction**
- **2.4 Litre capacity**
- **1.5Kw element**
- **Anti-scald lock**
- **Spring-back valve**
- **Minimal heat loss**

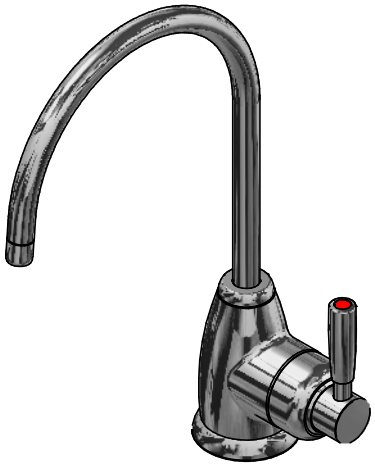

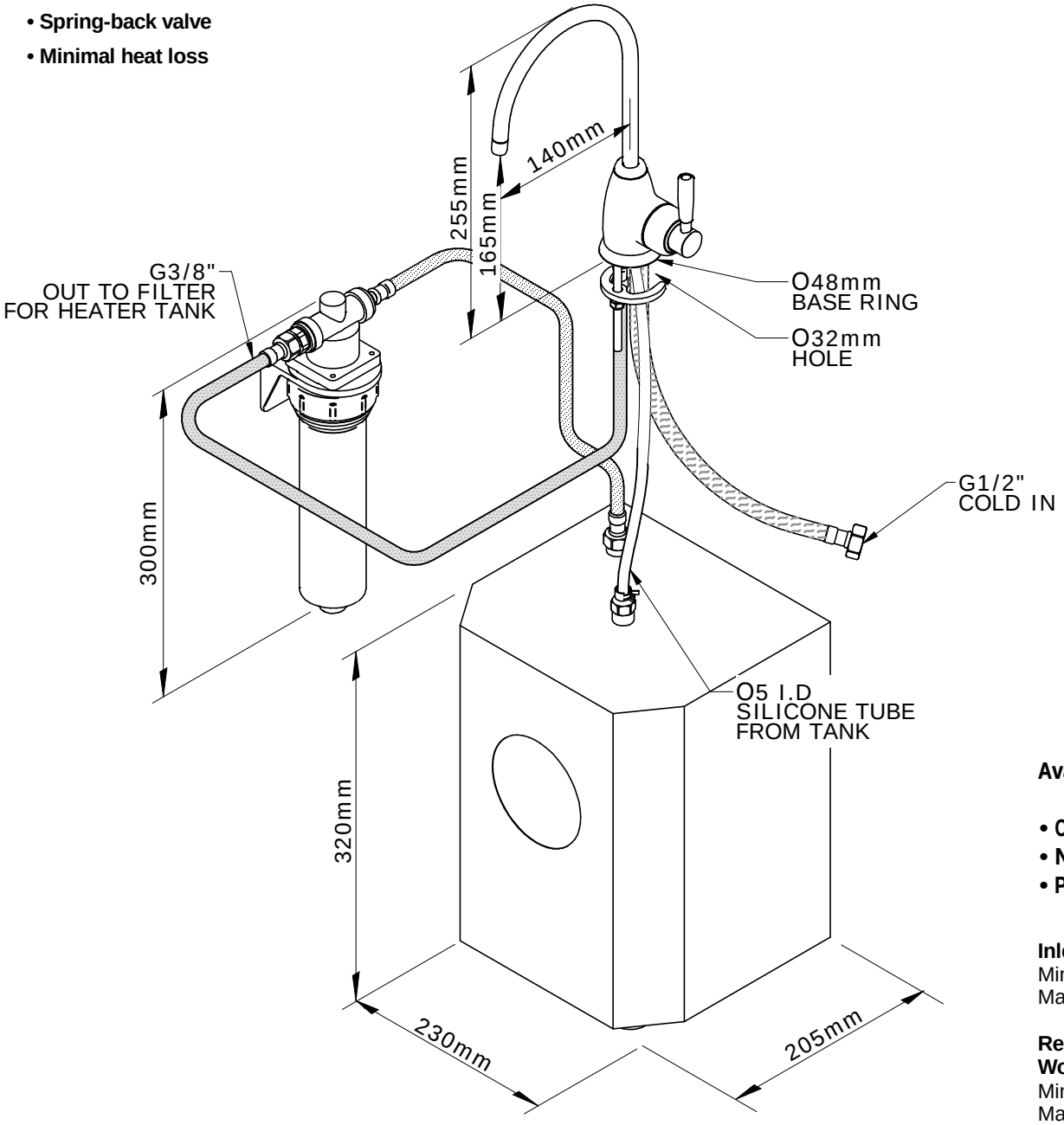

Available Finishes:

- **Chrome**
- **Nickel**
- **Pewter**

Inlet Temp Range:
Min 1°C / 34°F
Max 85°C / 185°F

Recommended Working Pressure:
Min 1.5bar / 22psi
Max 5bar / 75psi

Pressure Reducing Valve (PRV) required if inlet pressure is in excess of 5bar.
Contact our team to order our recommended PRV 9.13303.

Perrin & Rowe, Gateway XIII, Ferry Lane, Rainham, Essex, RM13 9JY. • T: +44 (0) 1708 526361 • F: +44 (0) 1708 550220
Perrin & Rowe is the trading name of TCL Manufacturing Limited. Registered in England and Wales - No. 2463775

MIMAS MINI INSTANT HOT DISPENSER

*** Where indicated specify colour**

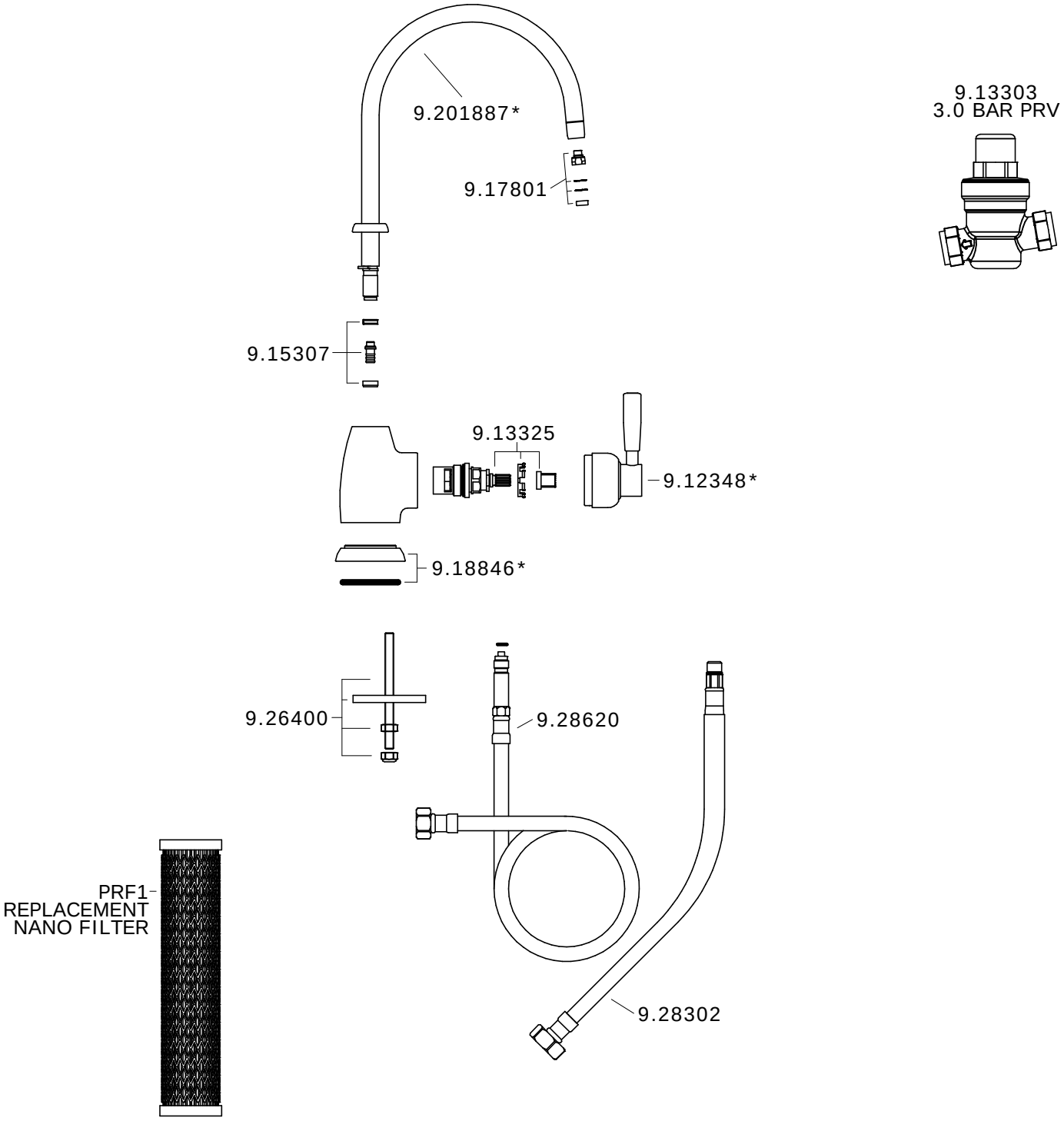

Perrin & Rowe, Gateway XIII, Ferry Lane, Rainham, Essex, RM13 9JY. • T: +44 (0) 1708 526361 • F: +44 (0) 1708 550220
Perrin & Rowe is the trading name of TCL Manufacturing Limited. Registered in England and Wales - No. 2463775