Product installation diagrams
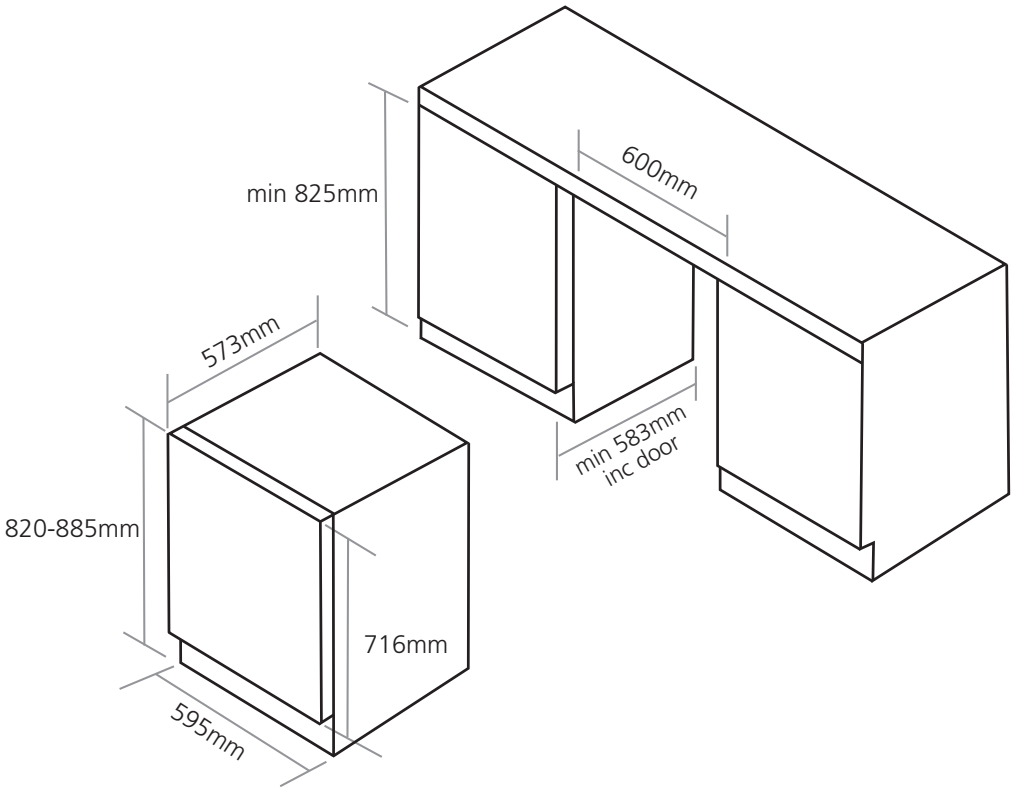
Models:
Wi6118
Wi6119
Wi6129
Wi6132WH