REGINOX

THAMES
DUAL LEVER KITCHEN TAP

CODE: THAMES

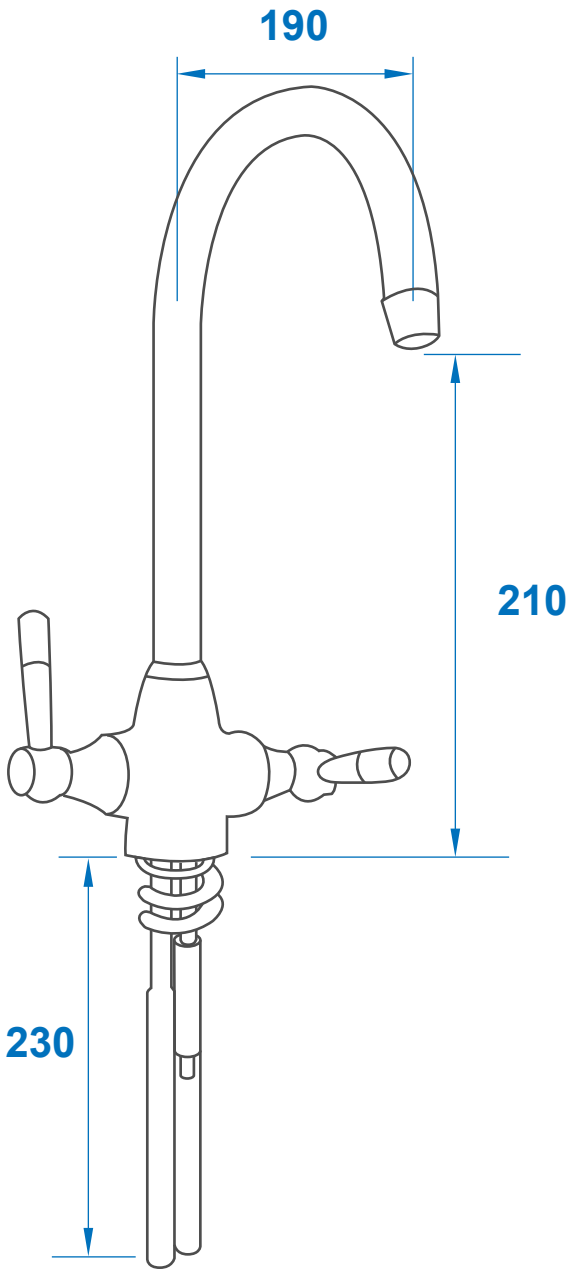

All dimensions are subject to change without notice. Please check the actual product for exact measurements.
No liability will be accepted for incorrect or out of date measurements.

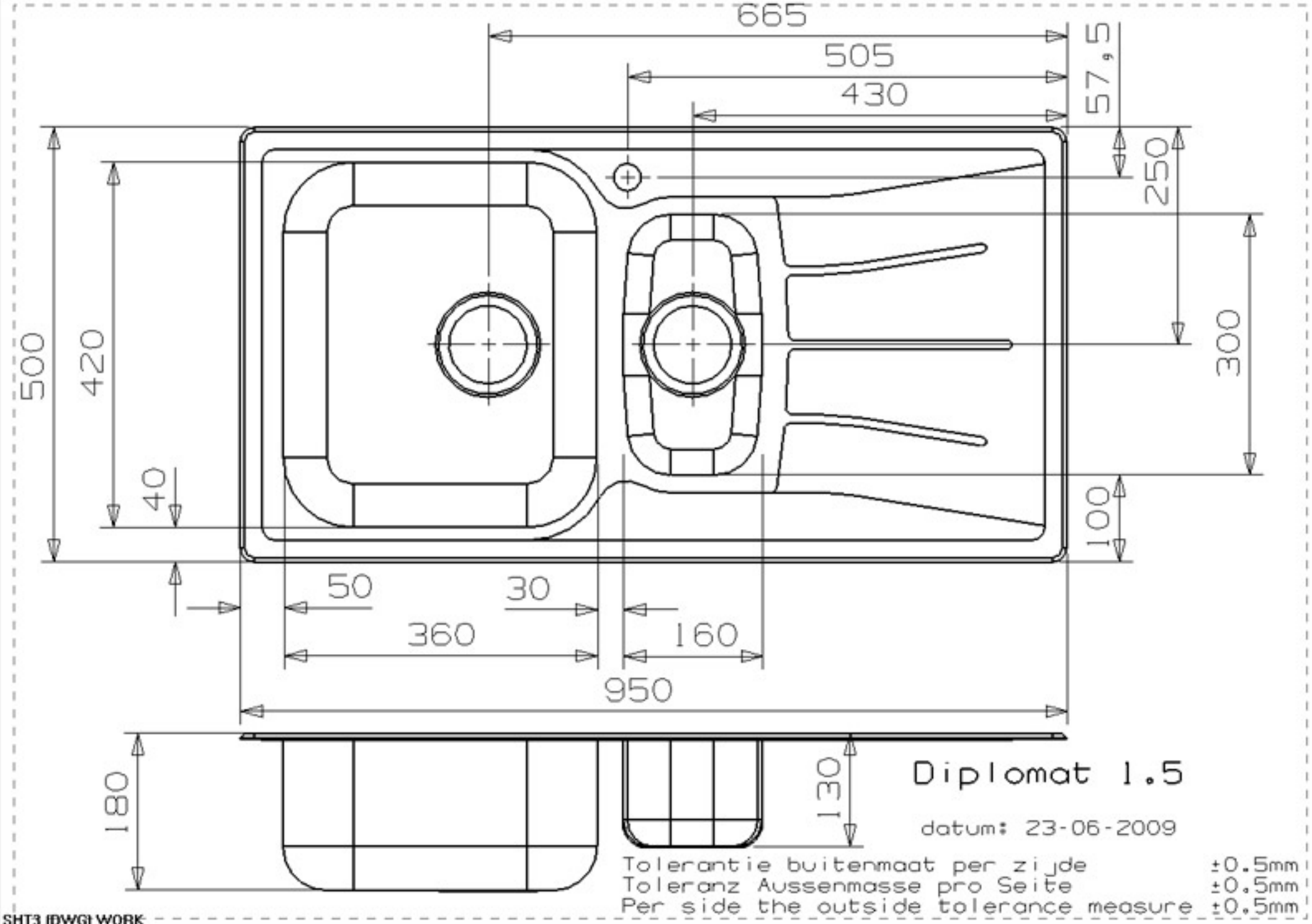
665
505
430
57,5
250
300
100
500
420
40
50
30
360
160
950
180
130
Diplomat 1.5
datum: 23-06-2009
Tolerantie buitenmaat per zijde ±0.5mm
Toleranz Aussenmasse pro Seite ±0.5mm
Per side the outside tolerance measure ±0.5mm
SHT3 [DWG] WORK