Product installation diagrams

Models:
FRE-CH

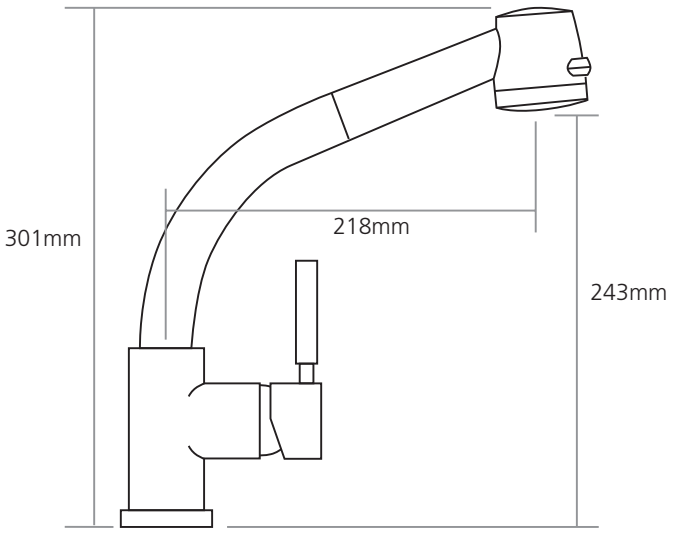

Note: Pull out hose extends by 500mm

Worktop cut-out 35mm required