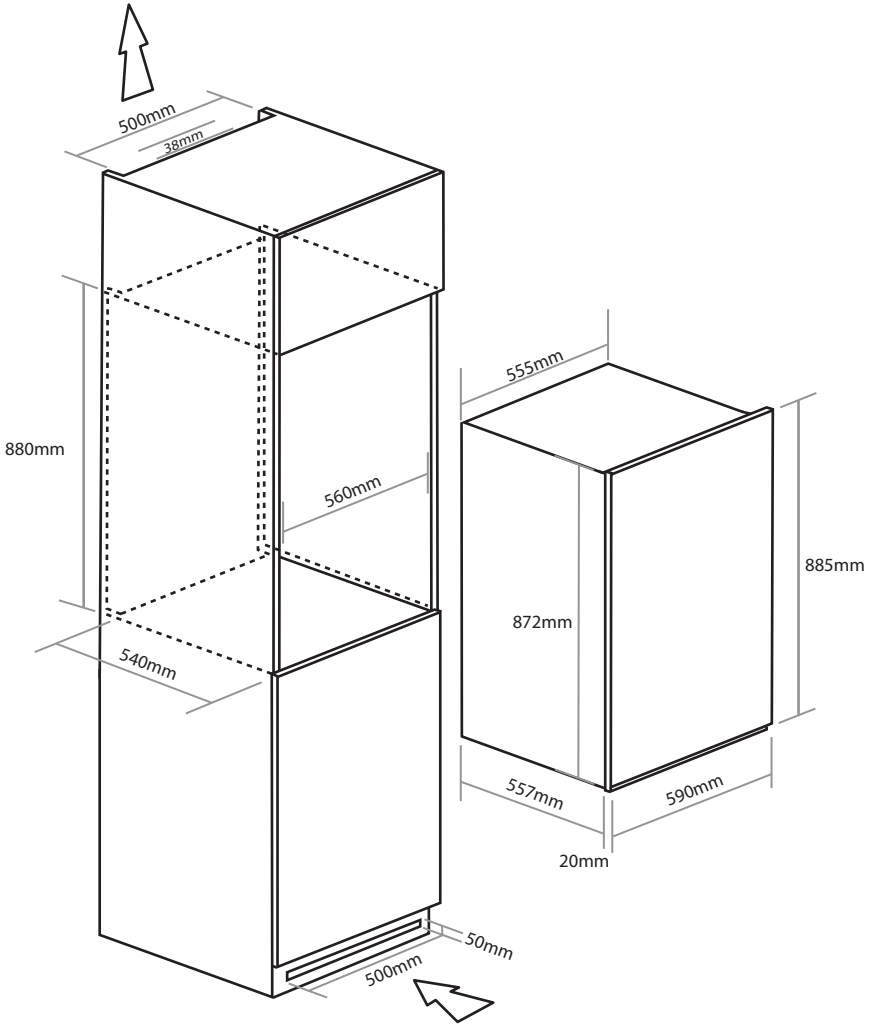
500mm
38mm
880mm
560mm
540mm
50mm
500mm
555mm
885mm
872mm
557mm
590mm
20mm