VIDA SPRINGFLOW®

Quarter Turn

ASTRACAST

VIDA SPRINGFLOW®

Quarter Turn

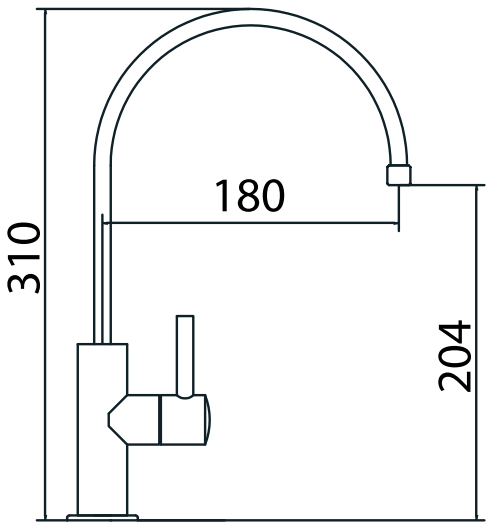

Minimum Recommended Pressure:

- Use with High Pressure System/ Combi Boiler with 5m Head / 0.3 Bar

Features:

- Medium Pressure 0.3
- Separate Flow
- Quarter Turn

Finishes Available:

Brushed

We reserve the right to amend specifications, weights, measures and colour availability without prior notice. All measurements are in millimetres unless otherwise stated.